Flow-Tek®

A Subsidiary of BRAY INTERNATIONAL, Inc.

2 Piece Threaded Standard Port Ball Valves: 1/4"-3"

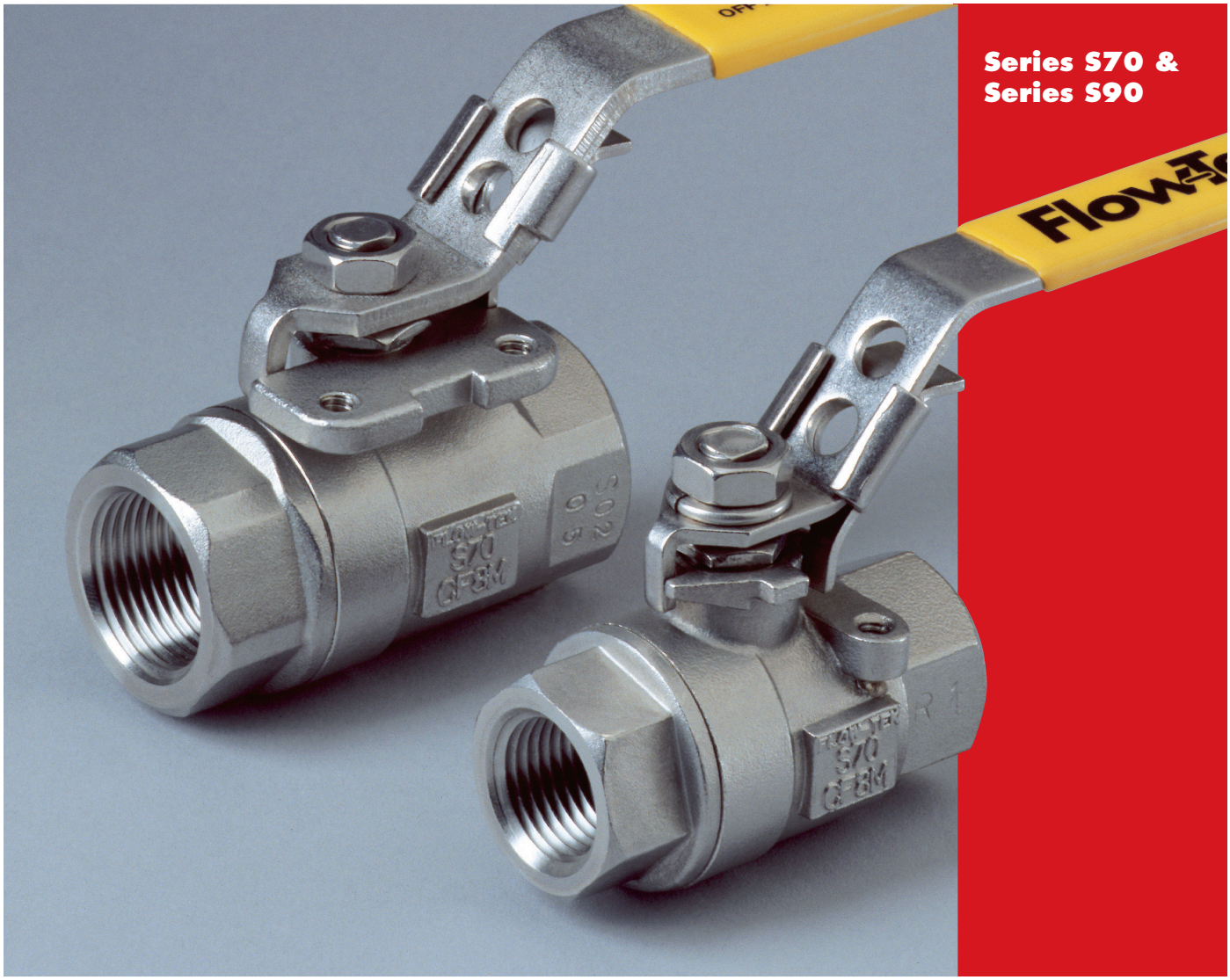

Flow-Tek's Series S70 and Series S90 ball valves offer an economical solution for high pressure applications in the process industries. Standard 2-piece valve bodies are available in Stainless Steel or Carbon Steel. Stainless Steel bodies are investment cast and solution annealed for the highest quality and added strength. Cast Carbon Steel bodies are normalized and black phosphate coated for added corrosion resistance. All body castings are marked with a foundry heat number for full traceability. These quarter turn valves feature an adjustable packing gland for secure sealing.

Other features include low operating torque, internal bottom entry blowout proof stems, and stainless steel safety latch handles.

Body Materials

S70: 316 Stainless Steel
S90: WCB Carbon Steel

Pressure Ratings

1/4" – 1": 2000 psi WOG
1-1/4" – 2": 1500 psi WOG
2-1/2" – 3": 1000 psi WOG
Steam Rating: 150 psi WSP

Temperature Range

S70: –50°F to +450°F
–46°C to +232°C
S90: –20°F to +450°F
–29°C to +232°C

End Connections Threaded - NPT

COMPONENTS AND MATERIALS

Item	Name	S70 Stainless Steel	S90 Carbon Steel	Qty.
1	Body	ASTM A351 Gr CF8M	ASTM A216 Gr WCB	1
2	End Cap	ASTM A351 Gr CF8M	ASTM A216 Gr WCB	1
3	Ball	ASTM A351 Gr CF8M	ASTM A351 Gr CF8M	1
4	Seat	RTFE	RTFE	2
5	Stem	ASTM A479 Type 316	ASTM A351 Type 316	1
6	Body Seal	RTFE	RTFE	1
7	Spring Washer	SS304	SS304	1
10	Anti-Static Device	SS304	SS304	2
12	Thrust Washer	RTFE	RTFE	1
14	Stem Packing	RTFE	RTFE	2
15	Packing Gland	SS304	SS304	1
25	Handle	SS304	SS304	1
26	Nut	SS304	SS304	1
28	Handle Sleeve	Vinyl	Vinyl	1
29	Locking Device	SS304	SS304	1

All Series S70/S90 valves comply with MSS-SP 72.

All valves are tested in accordance with MSS-SP 72.

Vacuum Service to 29 inches Hg. gauge.

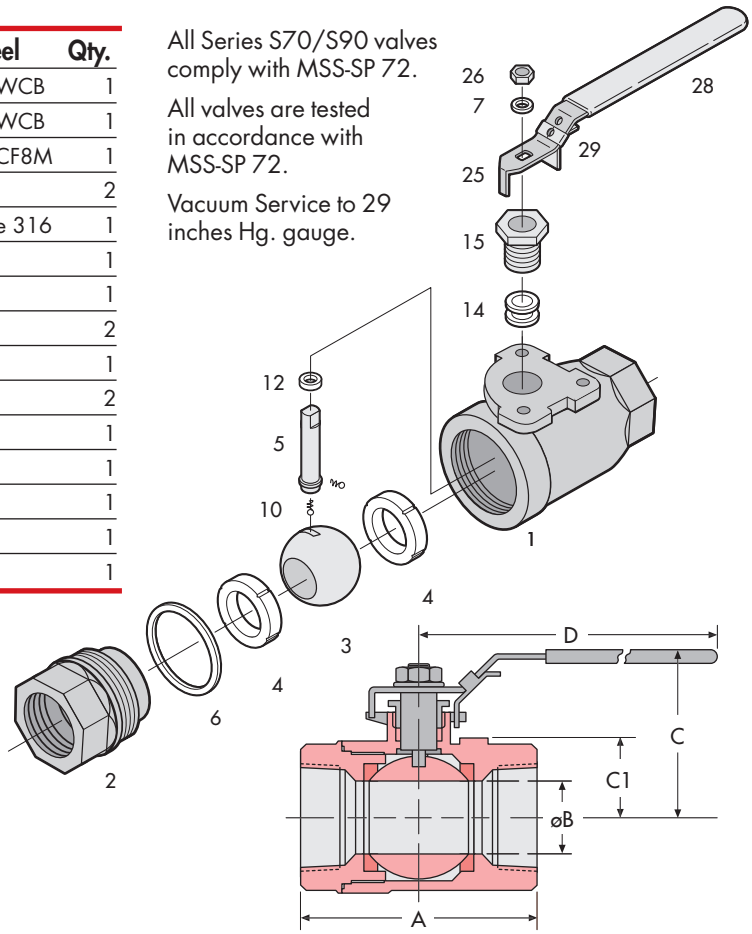

PRESSURE/TEMPERATURE

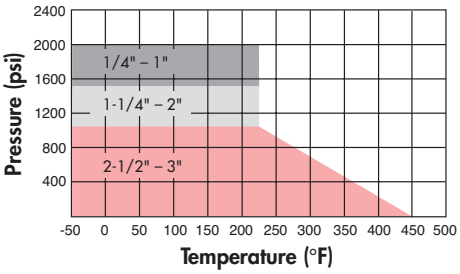

NOTE: S90 Carbon Steel Temperature Range limited to –20°F to +450°F.

STEAM RATING: 150 psi WSP.

DIMENSIONS AND WEIGHTS

Size ins mm	A	øB Port	C	C1	D	E	K	L	M	øP	V	U UNC	Cv	Torque lbs-in* Nm	Weight lbs kg
1/4	2.17	0.44	2.17	0.93	4.0	1.65	0.39	0.59	0.25	0.37	1.65	#10-24	15	60	0.55
6	55.1	11.2	55.1	23.6	102	42	10	15	6.4	9.4	42			6.8	0.25
3/8	2.17	0.49	2.17	0.93	4.0	1.65	0.39	0.59	0.25	0.37	1.65	#10-24	15	60	0.55
10	55.1	12.4	55.1	23.6	102	42	10	15	6.4	9.4	42			6.8	0.25
1/2	2.56	0.59	2.17	0.93	4.0	1.65	0.39	0.59	0.25	0.37	1.65	#10-24	15	65	0.65
15	65	15	55.1	23.6	102	42	10	15	6.4	9.4	42			7.3	0.3
3/4	2.80	0.59	2.36	1.1	4.0	1.65	0.39	0.59	0.25	0.37	1.65	#10-24	40	65	1.10
20	71.1	15	59.9	28	102	42	10	15	6.4	9.4	42			7.3	0.5
1	3.23	0.79	2.68	1.38	5.0	1.65	0.47	0.71	0.26	0.44	1.65	#10-24	70	130	2.00
25	82	20.1	68.1	35	127	42	12	18	6.5	11.2	42			14.7	0.9
1 1/4	3.62	0.98	2.87	1.54	5.0	1.65	0.47	0.77	0.26	0.44	1.65	#10-24	120	210	3.00
32.5	91.9	24.9	72.9	39	127	42	12	19.6	6.5	11.2	42			23.7	1.4
1 1/2	4.06	1.26	3.35	1.87	6.5	1.97	0.57	0.94	0.37	0.62	1.97	1/4"-20	200	260	4.25
40	103.1	32	85.1	47.5	165	50	14.5	23.9	9.5	15.7	50			29.4	1.9
2	4.65	1.50	3.64	2.17	7.5	2.56	0.57	0.94	0.37	0.62	2.76	5/16"-18	340	315	6.75
50	118.1	38.1	92.5	55	190	65	14.5	23.9	9.5	15.7	70			35.6	3.1
2 1/2	5.39	2.00	3.94	2.46	7.5	2.56	0.57	0.94	0.37	0.62	2.76	5/16"-18	400	425	9.50
65	136.9	50.8	101.1	62.5	190	65	14.5	23.9	9.5	15.7	70			48	4.3
3	6.20	2.56	4.65	3.07	10.25	2.56	0.85	1.28	0.47	0.75	2.76	5/16"-18	675	530	16.5
80	157.5	65	118.1	78	260	65	21.6	32.5	12	19	70			59.9	7.5

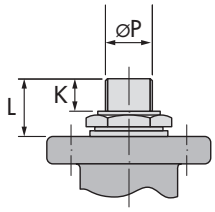

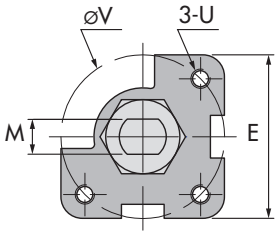

Flow-Tek®

A Subsidiary of BRAY INTERNATIONAL, Inc.
8323 N. Eldridge Pkwy #100 Houston, Texas 77041
832.912.2300 Fax: 832.912.2301
www.flow-tek.com

All statements, technical information, and recommendations in this bulletin are for general use only. Consult Flow-Tek representatives or factory for the specific requirements and material selection for your intended application. The right to change or modify product design or product without prior notice is reserved.

© 2009 Flow-Tek, Inc.
F-2202_EN_S70-90_2014-01

HOLDFAST
FLUID POWER

Forrestfield

657 Dundas Road,
Forrestfield WA 6058

Phone: 1300 HOLDFAST
Phone: (08) 9359 1795
Fax: (08) 9359 1792
Email: sales@holdfastaust.com.au

Broome

10/274 Port Drive,
Broome WA 6725

Phone: 1300 HOLDFAST
Phone: (08) 9192 6007
Fax: (08) 9192 6067
Email: salesnw@holdfastaust.com.au

Naval Base

1/27 Dooley Street
Naval Base WA 6165

Phone: 1300 HOLDFAST
Phone: (08) 9410 0716
Fax: (08) 9410 1152
Email: sales2@holdfastaust.com.au

1300 HOLDFAST